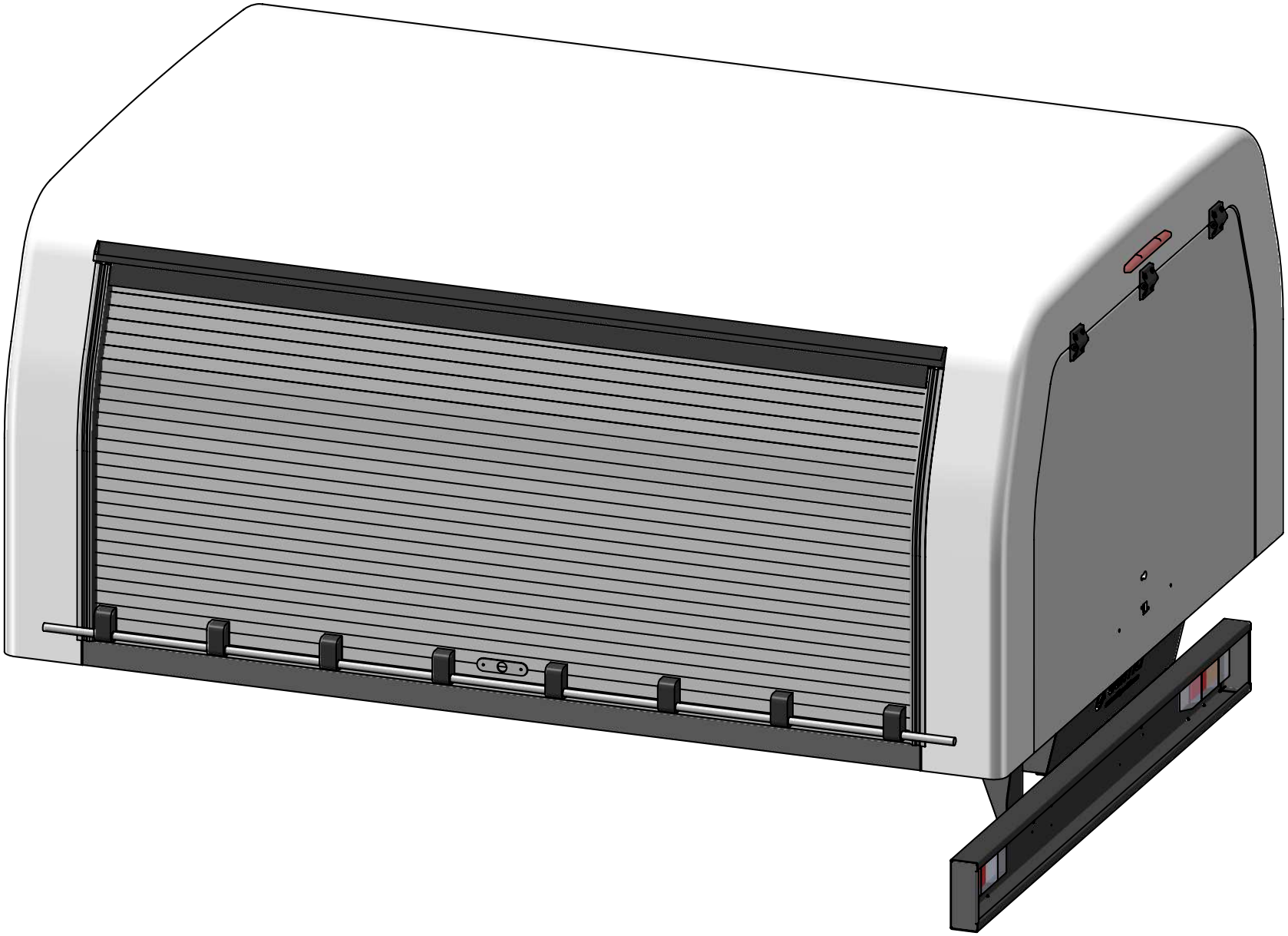

APPROX. WEIGHT: 383 Kg

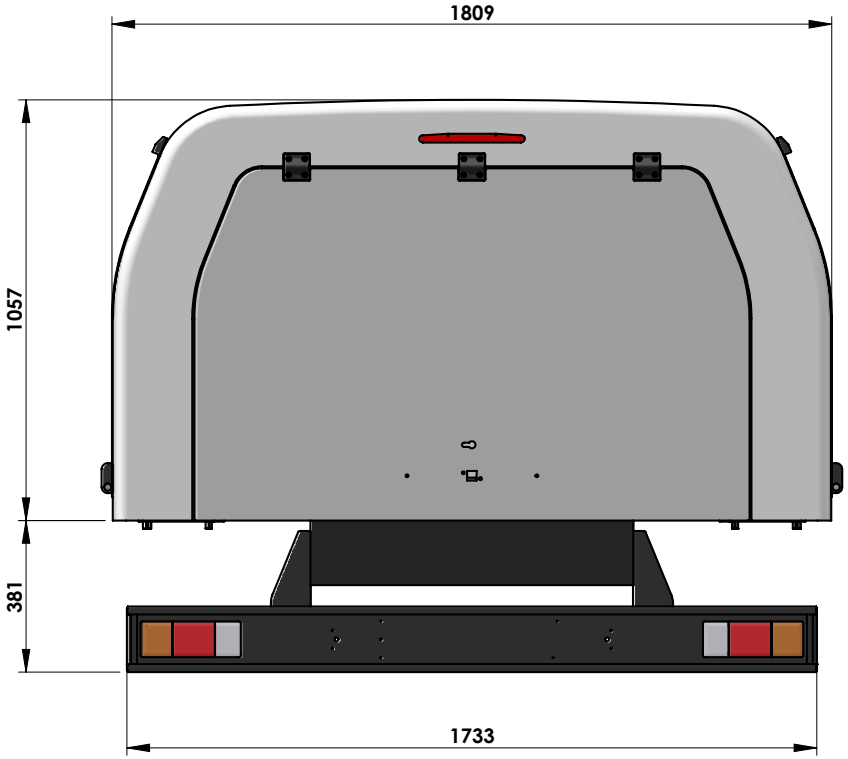
1809
1057
381
1733

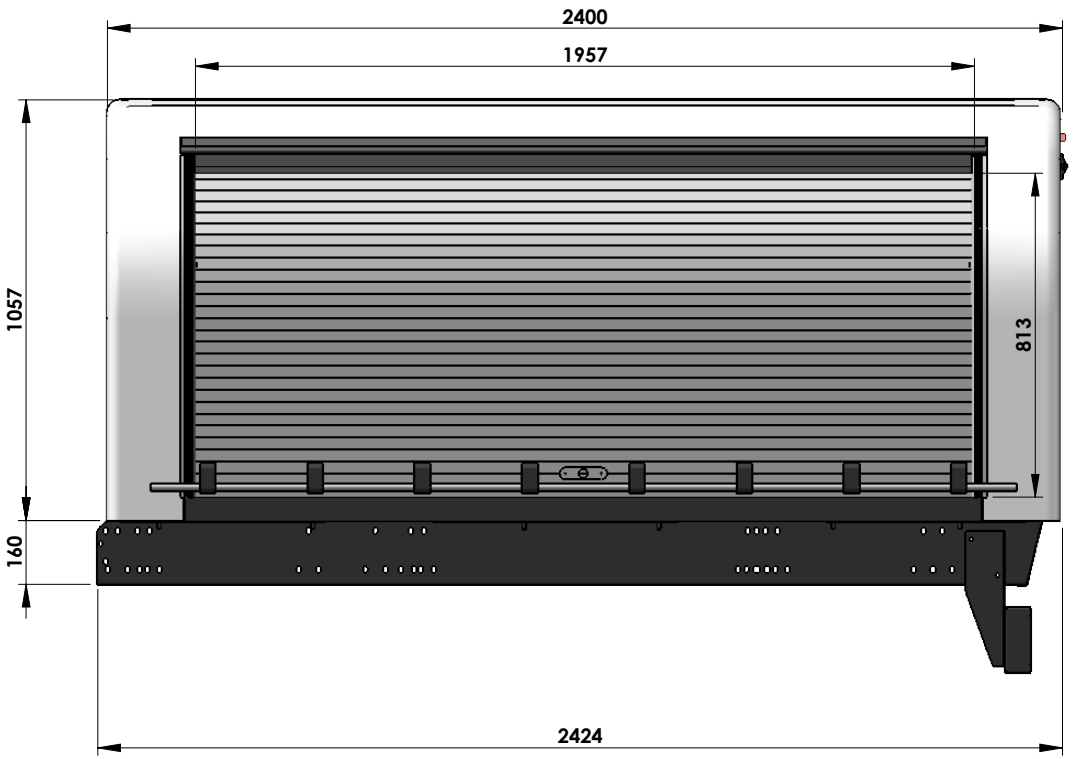
2400
1957
1057
813
160
2424

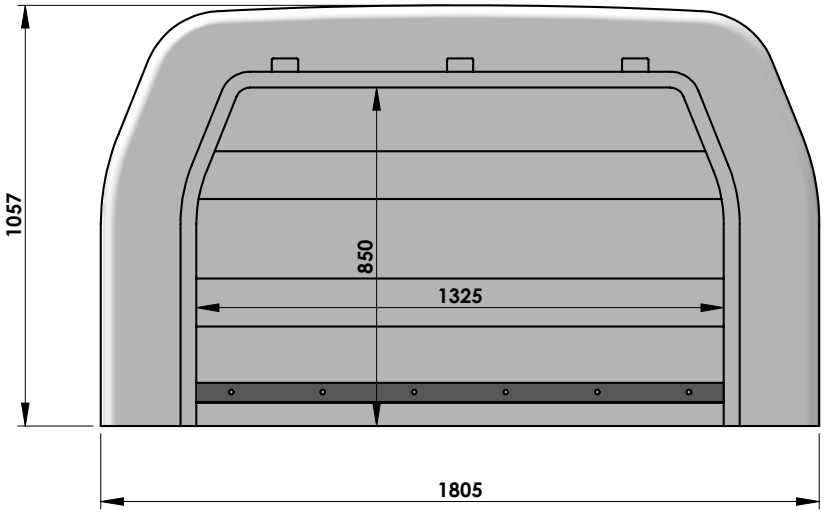
1057
850
1325
1805

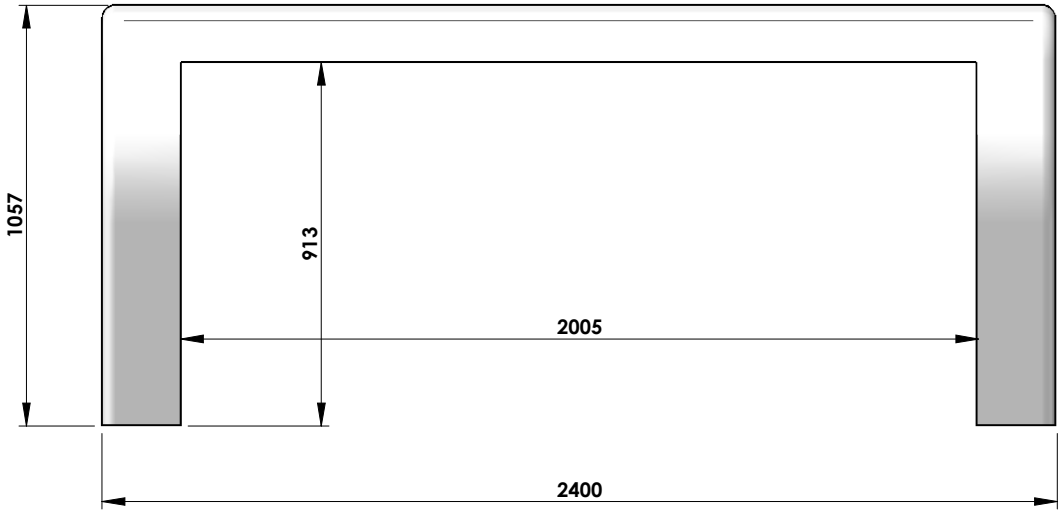
1057
913
2005
2400

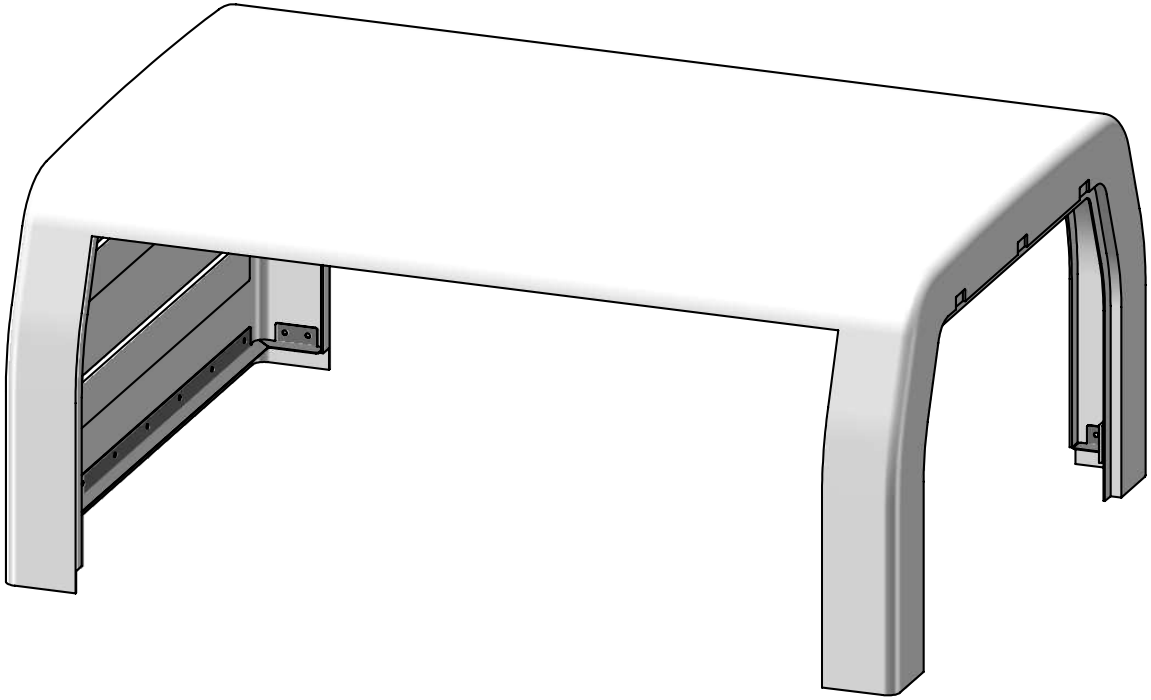

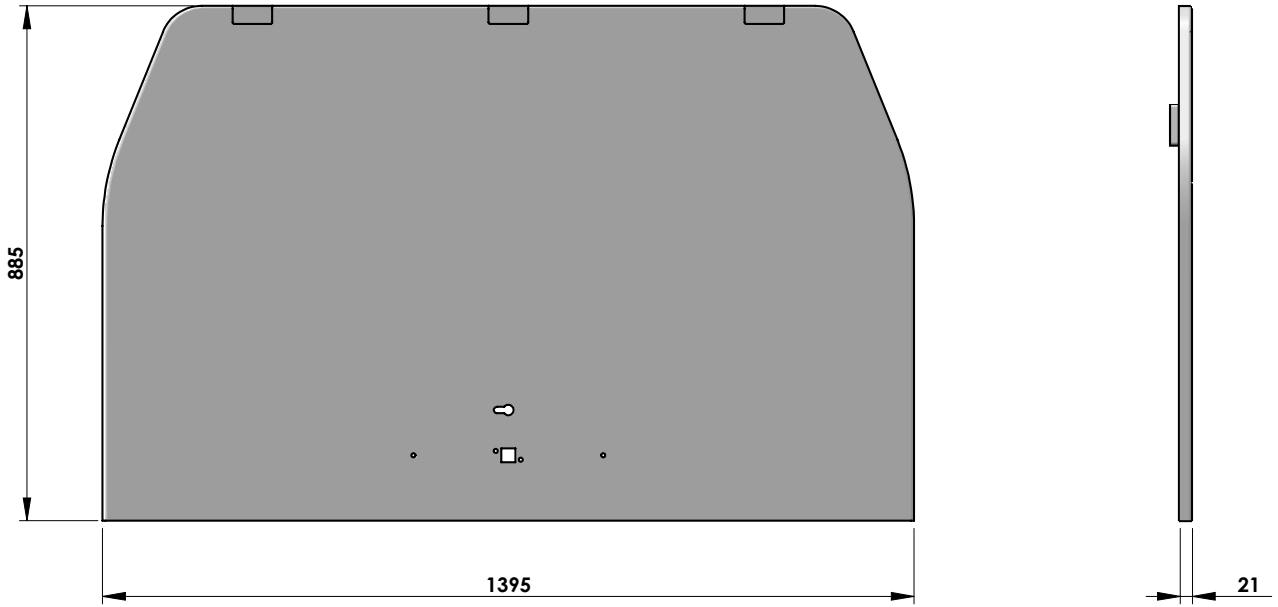
885
1395
21

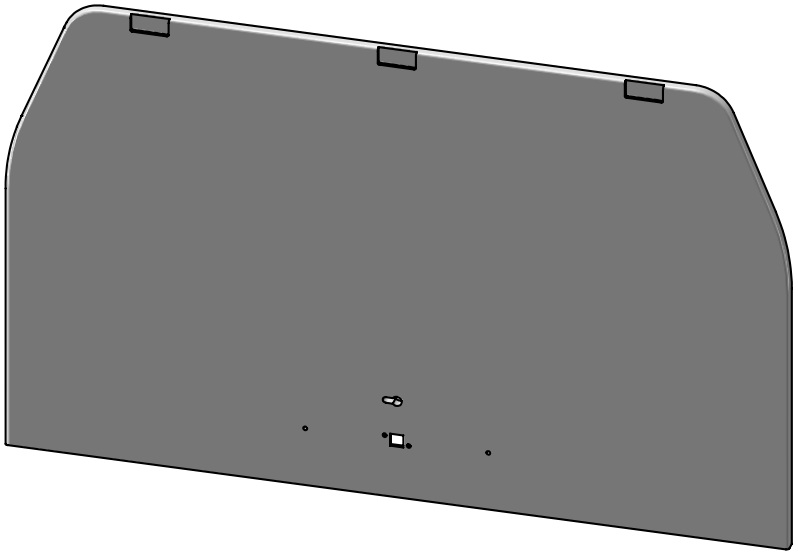

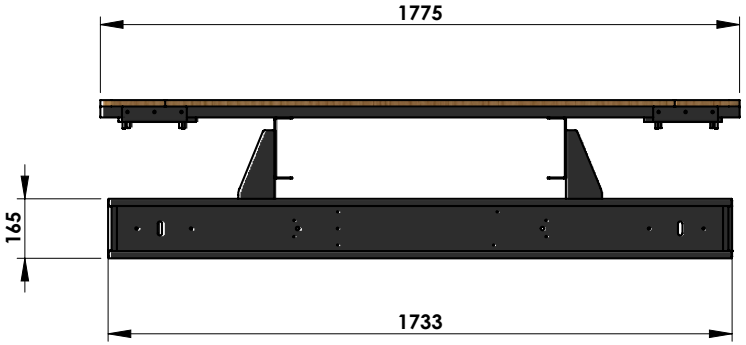
1775
165
1733

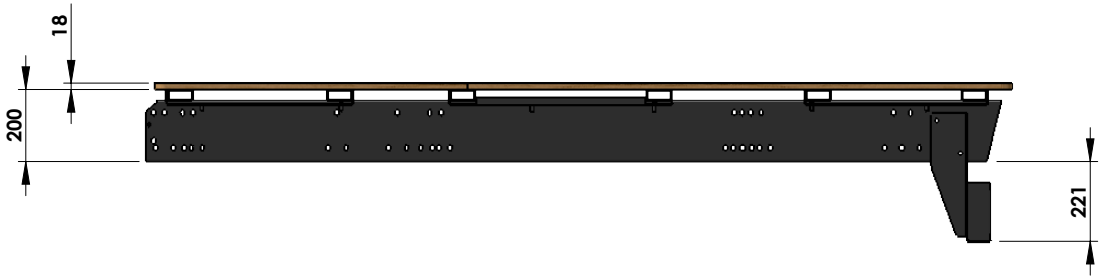
18
200
221

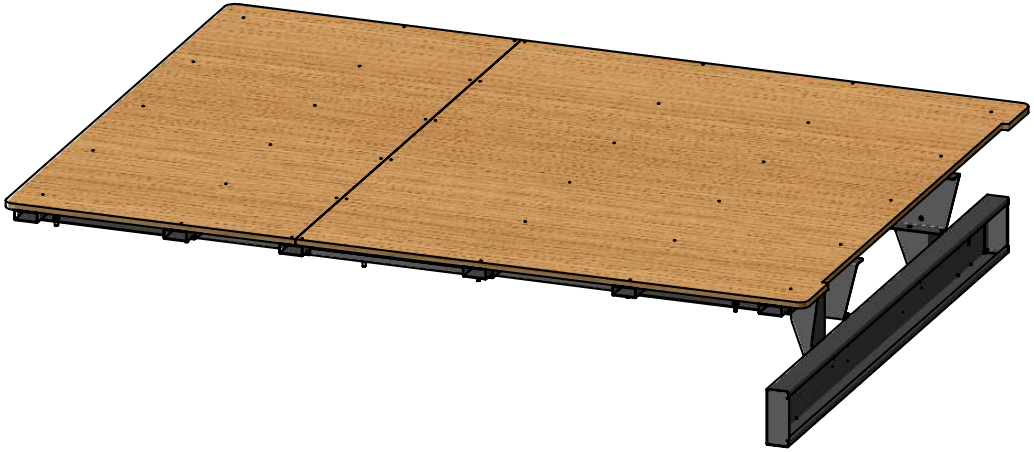

2384
1775